REVISIONS				
ZONE	REV.	DESCRIPTION	DATE	APPROVED

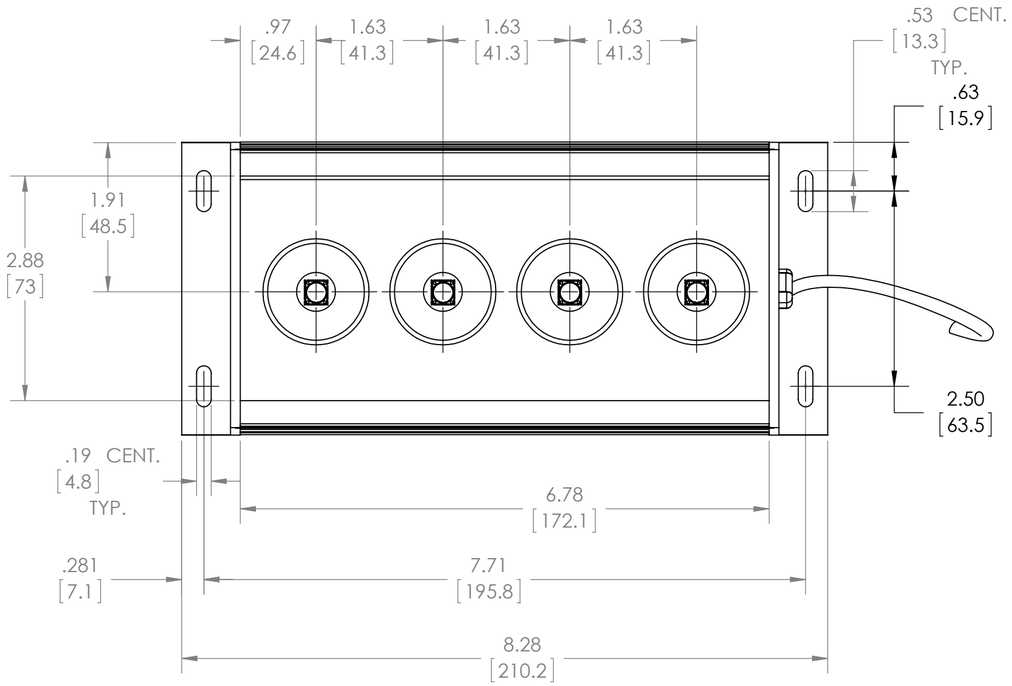

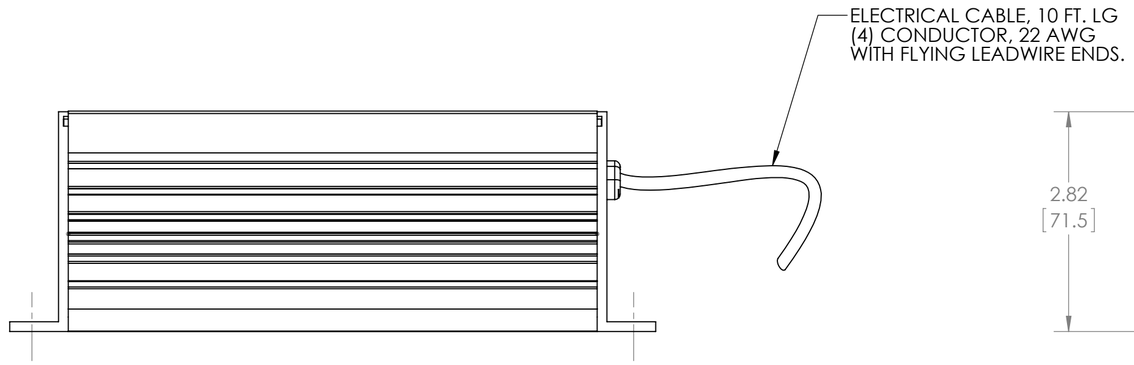

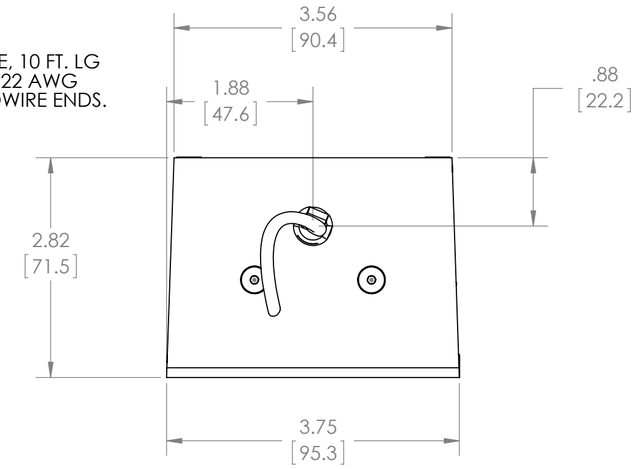

PROPRIETARY AND CONFIDENTIAL

THE INFORMATION CONTAINED IN THIS DRAWING IS THE SOLE PROPERTY OF <INSERT COMPANY NAME HERE>. ANY REPRODUCTION IN PART OR AS A WHOLE WITHOUT THE WRITTEN PERMISSION OF <INSERT COMPANY NAME HERE> IS PROHIBITED.

NEXT ASSY	USED ON
APPLICATION	

UNLESS OTHERWISE SPECIFIED:

DIMENSIONS ARE IN INCHES
TOLERANCES:
FRACTIONAL ±
ANGULAR: MACH ± BEND ±
TWO PLACE DECIMAL ±
THREE PLACE DECIMAL ±

INTERPRET GEOMETRIC TOLERANCING PER:

MATERIAL

FINISH

DO NOT SCALE DRAWING

	NAME	DATE
DRAWN	KW	12/2/2011
CHECKED		
ENG APPR.		
MFG APPR.		
Q.A.		

COMMENTS:

METAPHASE TECHNOLOGIES, INC.

TITLE:

FLOOD LIGHT, HIGH POWER

SIZE	DWG. NO.	REV
C	FLD406	

SCALE: 1:2 WEIGHT: SHEET 1 OF 1